dh

didheya

Introduction	Introducción	
Didheya	Didheya	**04**
Pure Metallics, Colours & Neutrals	Pure Metallics, Colours & Neutrals	**12**
Custom colours service	Colores a medida	**24**
New Designs	Nuevos diseños	**26**
Applications	Aplicaciones	
Sliding doors	Puertas correderas	**30**
Entrance doors	Puertas de entrada	**36**
Swing doors	Puertas de paso	**38**
Kitchens	Cocina	**40**
Furniture	Mobiliario	**48**
Wardrobes	Armarios	**52**
Bathrooms	Baño	**56**
Products	Productos	
Sliding door handles	Tiradores para puertas correderas	**62**
Glass door handles	Tiradores para puertas de cristal	**74**
Pull handles	Manillones de puerta	**76**
Kitchen handles	Tiradores para cocina	**84**
Furniture knobs	Pomos para muebles	**92**
Wardrobe knobs	Pomos para armario	**94**
Hangers	Colgadores	**96**
Towel rails	Toalleros	**98**
Roll holders	Portarrollos	**99**
Toilet brushes and roll holders	Escobillas de baño y guardar rollos	**100**
Shelves	Estantes	**101**
Door stoppers	Topes para puerta	**102**
Signage	Señalética	**104**

Didheya:
We are manufacturers

At Didheya, we offer a complete and responsive service that is sensitive to the market's needs. We are a company with more than 30 years of experience in the world of design and production of stainless steel products. Our products are distributed around the world, in both architectural projects – housing and public buildings – and transport –metros, buses, trams and lifts.

Didheya:
Somos fabricantes

En Didheya ofrecemos un servicio integral, cercano y sensible a las necesidades del mercado. Somos una empresa con más de 30 años de experiencia en el mundo del diseño y la producción de elementos en acero inoxidable. Nuestros productos se pueden encontrar repartidos por todo el mundo, tanto en proyectos arquitectónicos –viviendas o edificios públicos– como en vehículos de transporte –metros, autobuses, tranvías o ascensores–.

dh

Mecanizado, pulido y pintura son los principales
procesos de fabricación en Didheya.

Machining, polishing and painting are Didheya's
main manufacturing processes.

Pure Metallics, Colours & Neutrals

A range of colours and finishes applicable to all the products in the collection, which has been developed to offer new solutions to architects, interior designers and decorators, to improve the creation of spaces, broaden their options and enable big changes through small details. A palette of colours that consists of two types of finish: the “Pure Metallics” showcase the part’s metallic appearance, and “Neutrals” and “Colours”, which cover the part completely.

Pure Metallics, Colours & Neutrals

Una gama de colores y acabados aplicable a todos los productos de la colección que nace con el objetivo de aportar nuevas soluciones a arquitectos, interioristas y decoradores; para mejorar la creación de espacios, amplificando las opciones y posibilitando grandes cambios con pequeños detalles. Una propuesta de colores que se compone de dos tipos de acabados: Los «Pure Metallics» que permiten apreciar el aspecto metálico de la pieza, y los «Neutrals» y «Colours», que cubren esta en su totalidad.

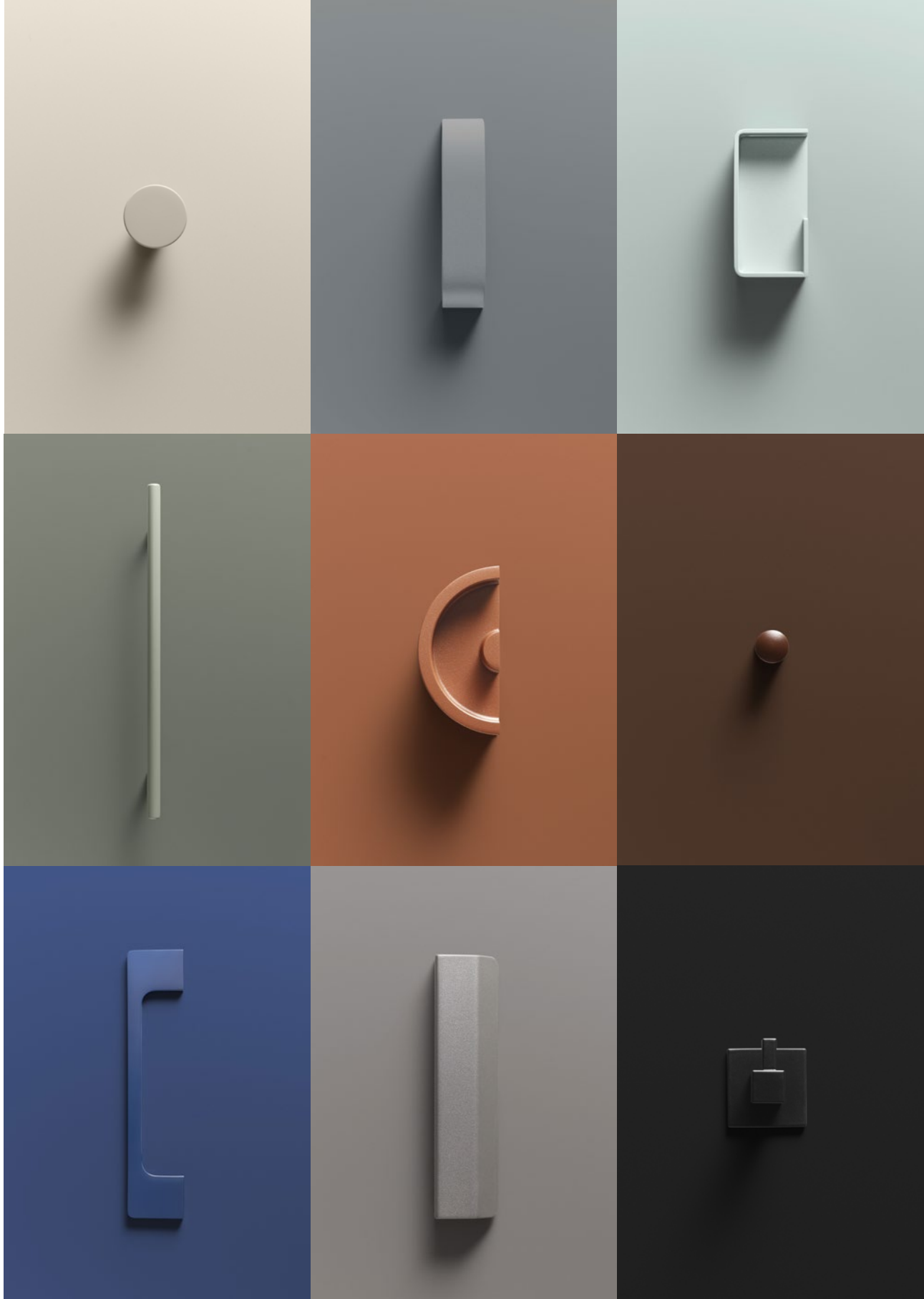

The installation of an electrostatic coating system at our plant is the latest stage in our concept of a global service: not only can we listen to and act on our clients' needs and those of the market, but also, we have complete control over the manufacturing process and the quality of our products.

La incorporación de una cadena de pintura electrostática a nuestras instalaciones ha sido el último paso en nuestra forma de entender un servicio global: no sólo nos permite escuchar y hacer realidad las necesidades de nuestros clientes y del mercado, sino también, controlar el proceso de fabricación y la calidad de nuestros productos de forma íntegra.

Pure Metallics

Inox

Titanium

Bronze

Copper

Matt Gold

Satin Brass

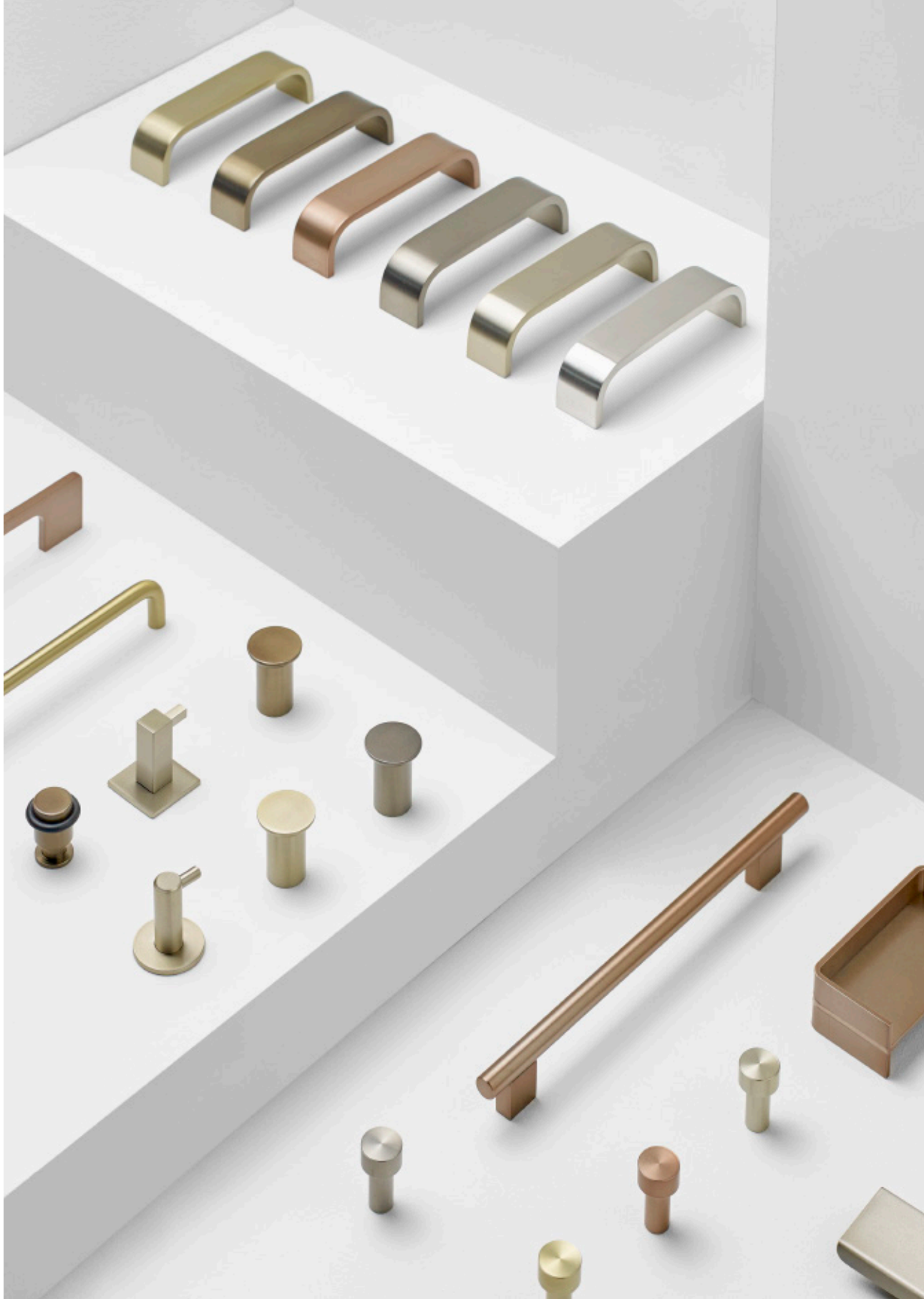

Neutrals

Graphite

Chocolate

White

Black

Moyen

Sable

Colours

Ochre

Brown

Agave

Navy Blue

Green Pearl

Blue Grey

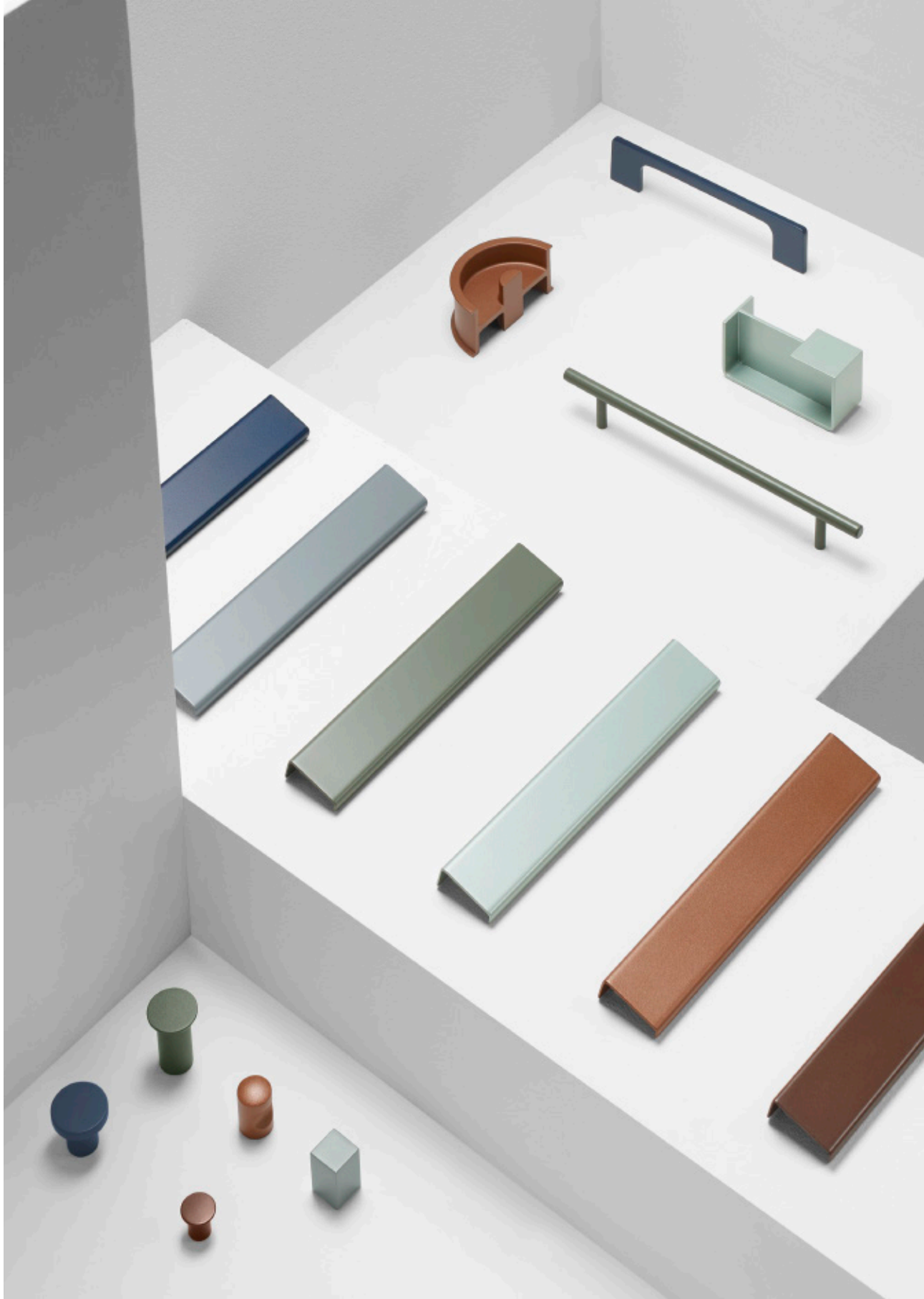

Custom colours

The production of electrostatic coating finishes not only allows us to launch new colour palettes. It also means we listen, adapt and manufacture according to the needs and tastes of our clients. Didheya's custom colours service means we can create unique parts for specific projects.

Colores a medida

La producción de acabados con pintura electrostática no solo permite lanzar nuevas líneas de colores. También, escuchamos, nos adaptamos y fabricamos según las necesidades y gustos de nuestros clientes. El servicio de colores personalizado de Didheya permite crear piezas únicas para proyectos concretos.

New Designs

Design is the process through which we continually innovate and improve, imagining and building new pathways. Recently we started a collaboration with the designers Iratzoki & Lizaso to develop new products that will soon be launched.

Nuevos Diseños

El diseño es el proceso mediante el cual innovamos y mejoramos de manera continua, imaginando y construyendo nuevos caminos. Recientemente, hemos iniciado una colaboración con los diseñadores Iratzoki & Lizaso para el desarrollo de nuevos productos que en breve verán la luz.

Applications

Sliding doors
Puertas correderas

I-3250

Sliding doors
Puertas correderas

i-4254

Sliding doors
Puertas correderas

i-4258

Entrance doors
Puertas de entrada

i-2000

Swing doors
Puertas de paso

i 1260 giratoria

Kitchens
Cocinas

i-110

Kitchens
Cocinas

I-129

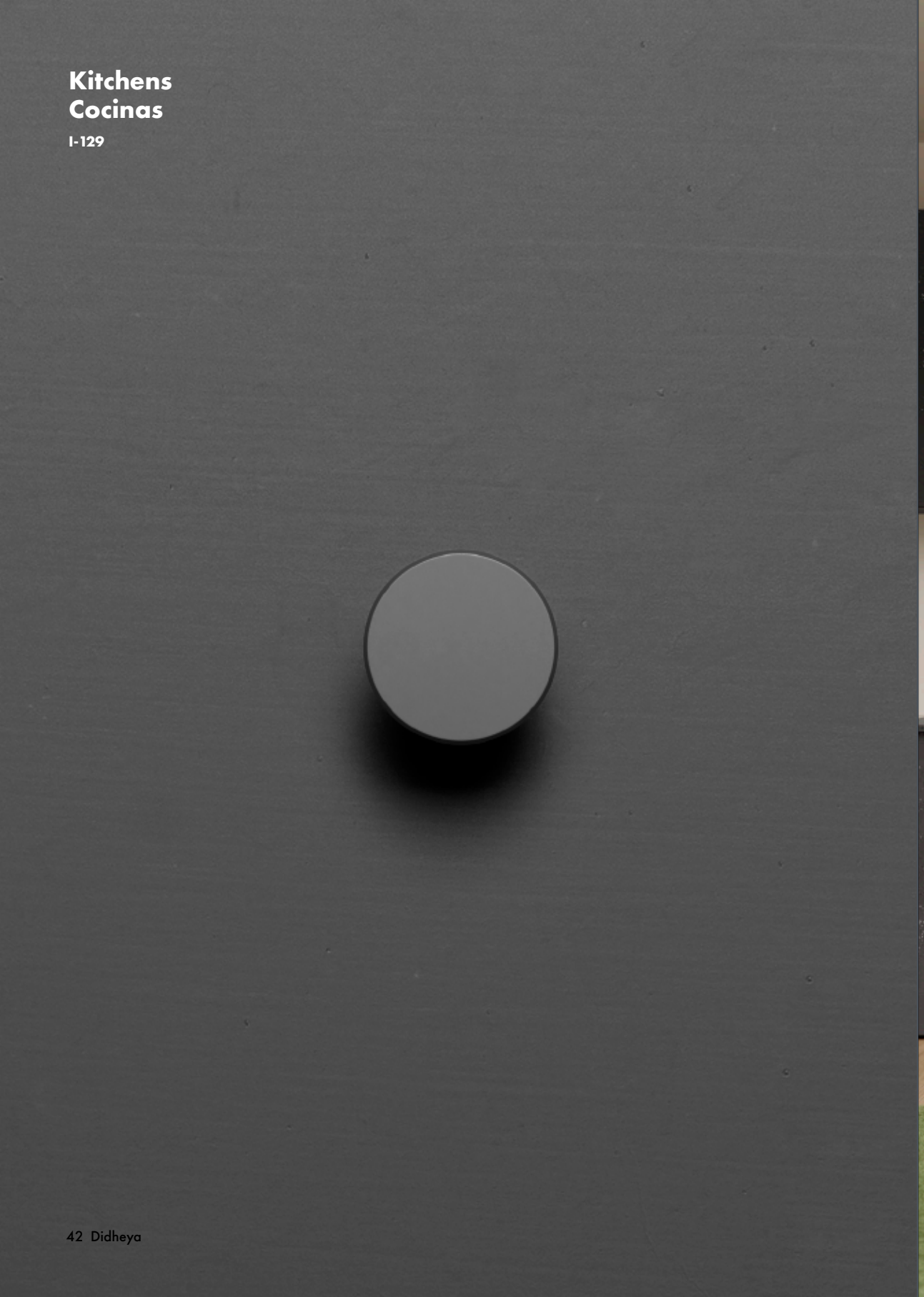

Kitchens
Cocinas

i-200

Kitchens
Cocinas

in - 350

Furniture
Muebles

i-410

Furniture
Muebles

IN 350

Wardrobes
Armarios

i-126

Wardrobes
Armarios

i-131

Bathrooms
Baños

Ku-20

Bathrooms
Baños

percha-1

Products

i-3250

REF.	53010	L 100 x W 48,5	DT 10
REF.	53035	L 100 x W 48,5	DT 35
REF.	53040	L 100 x W 48,5	DT 40
REF.	53045	L 100 x W 48,5	DT 45
REF.	53050	L 100 x W 48,5	DT 50
REF.	53060	L 100 x W 48,5	DT 60

DT: Door Thickness / Grosor de puerta

i-4250

REF.	53335	L 100 x W 50	DT 35
REF.	53340	L 100 x W 50	DT 40
REF.	53345	L 100 x W 50	DT 45
REF.	53350	L 100 x W 50	DT 50

DT: Door Thickness / Grosor de puerta

Sliding door handles / Tiradores para puertas correderas

i-4254

REF.	53721	L 100 x W 50	DT 35
REF.	53723	L 100 x W 50	DT 40
REF.	53726	L 200 x W 85	DT 35
REF.	53728	L 200 x W 85	DT 40
REF.	53731	L 300 x W 85	DT 35
REF.	53733	L 300 x W 85	DT 40
REF.	53736	L 500 x W 85	DT 35
REF.	53738	L 500 x W 85	DT 40

DT: Door Thickness / Grosor de puerta

i-4254 Slim

REF.	53802	L 200 x W 50	DT 35
REF.	53805	L 200 x W 50	DT 40
REF.	53810	L 200 x W 50	DT 44,5
REF.	53806	L 300 x W 50	DT 35
REF.	53808	L 300 x W 50	DT 40
REF.	53811	L 300 x W 50	DT 44,5

DT: Door Thickness / Grosor de puerta

i-4251

REF.	53701	L 120 x W 55	DT 35
REF.	53703	L 120 x W 55	DT 40
REF.	53707	L 120 x W 55	DT 45
REF.	53705	L 120 x W 55	DT 50

DT: Door Thickness / Grosor de puerta

i-4253

REF.	53712	L 100 x W 60	DT 35
REF.	53714	L 100 x W 60	DT 40
REF.	53716	L 100 x W 60	DT 45

DT: Door Thickness / Grosor de puerta

Sliding door handles / Tiradores para puertas correderas

i-4257

REF.	53760	L 200 x W 50	DT 35
REF.	53762	L 200 x W 50	DT 40
REF.	53766	L 200 x W 50	DT 44,5

DT: Door Thickness / Grosor de puerta

i-4258

REF.	53770	L 150 x W 50	DT 35
REF.	53772	L 150 x W 50	DT 40
REF.	53776	L 150 x W 50	DT 44,5

DT: Door Thickness / Grosor de puerta

i-4500

REF.	53105	L 180 x W 90

i-3250/1

REF.	53100	Ø 58 (backset 50)

Includes the I-255 finger pull
Incluye dedal i-255

i-4250/1

REF.	53300	L 85 x W 85 (backset 50)

Includes the I-255 finger pull
Incluye dedal i-255

i-4510

REF.	53110	L 180 x W 90

i-450

REF.	34285	L 85 x W 85

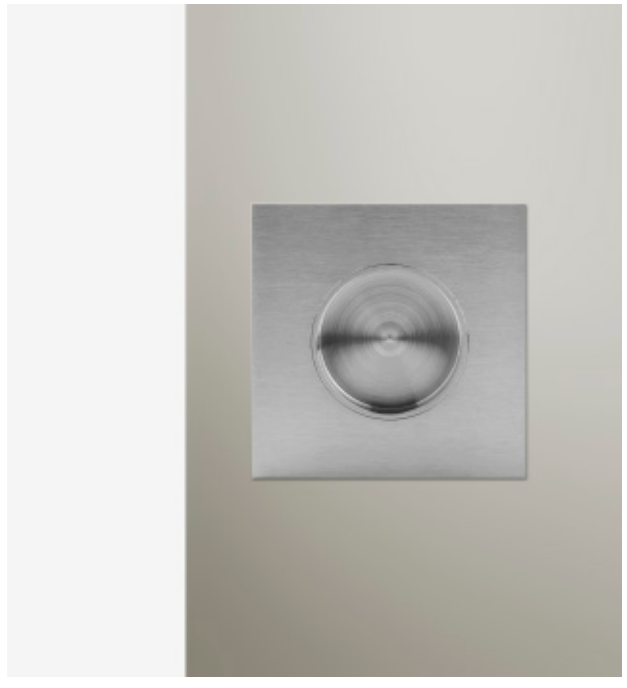

i-250

REF.	31560	Ø 60

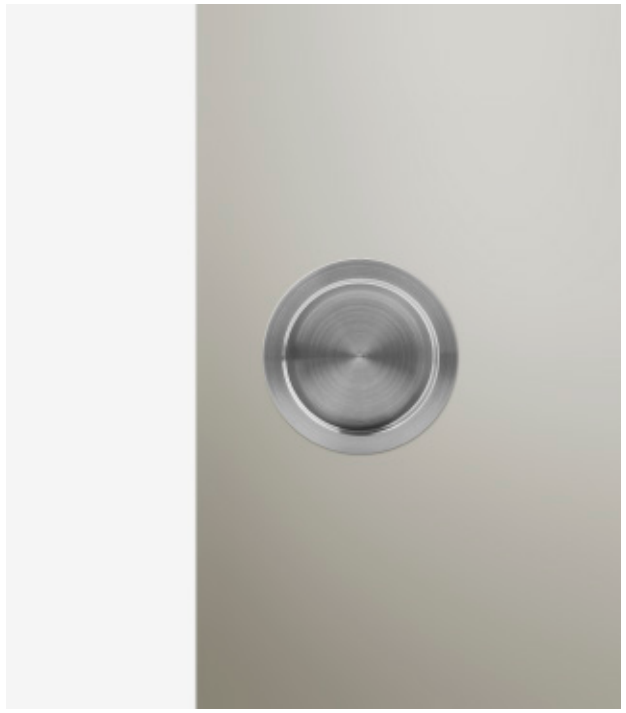

i-4501

REF. 53106 L 75 x W 75

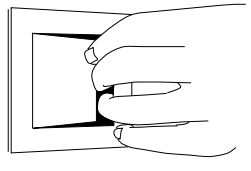

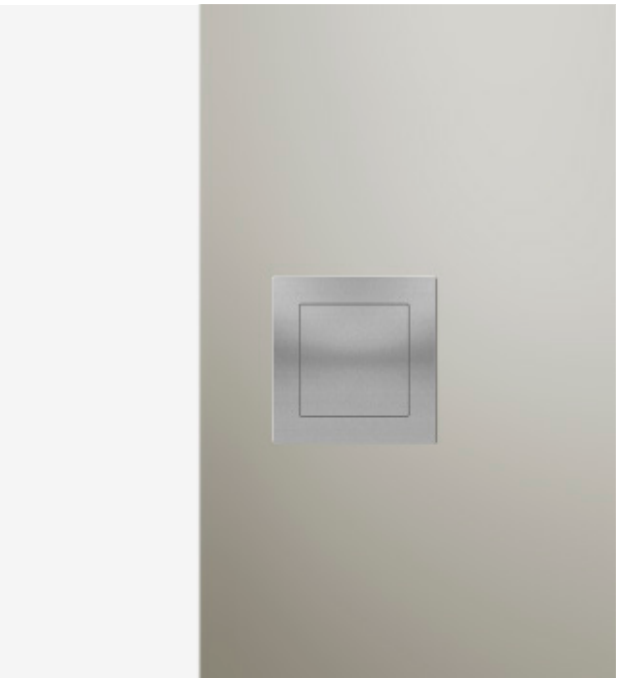

i-4502

REF. 53107 Ø 75

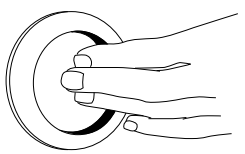

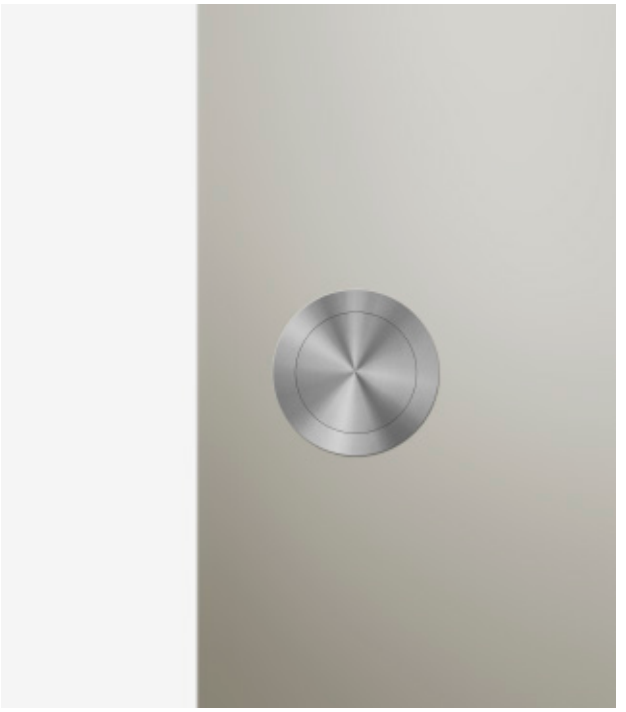

i-4503

REF. 53108 L 155 x W 45

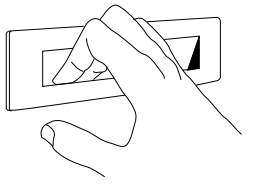

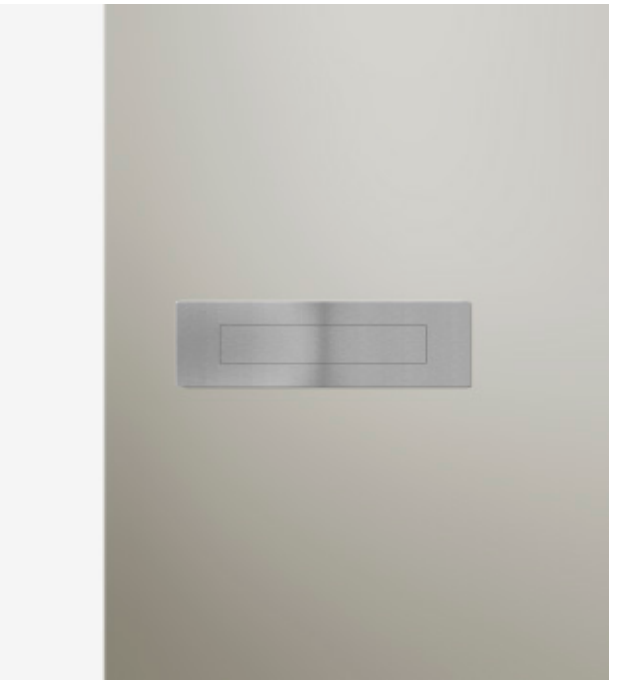

i-4504

REF. 53109 L 156 x W 45

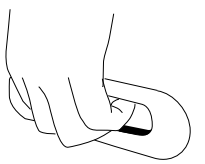

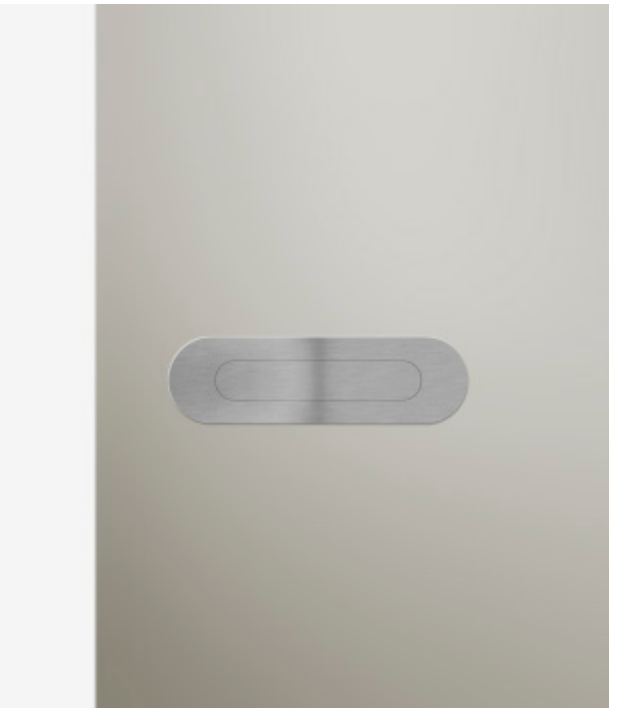

i-4010

REF.	53512	L 50 x W 50 x H 6
REF.	53513	L 65 x W 65 x H 6
REF.	53514	L 185 x W 85 x H 6

Set of 2 / set de 2

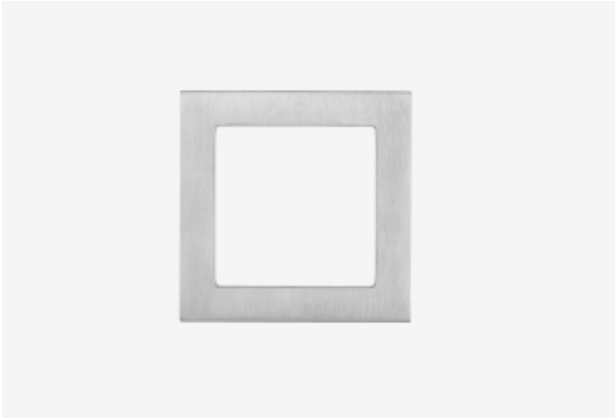

i-3010

REF.	53500	Ø 40 x H 6
REF.	53501	Ø 70 x H 6
REF.	53502	Ø 100 x H 6

Set of 2 / set de 2

i-3020

REF.	53503	L 85 x W 40 x H 6
REF.	53504	L 150 x W 70 x H 6
REF.	53505	L 300 x W 100 x H 6

Set of 2 / set de 2

i-4030

REF.	53518	L 150 x W 60 x H 6
REF.	53519	L 300 x W 75 x H 6
REF.	53520	L 500 x W 90 x H 6

Set of 2 / set de 2

i-4020

REF.	53515	L 85x W 50 x H 6
REF.	53516	L 150 x W 65 x H 6
REF.	53517	L 300 x W 80 x H 6

Set of 2 / set de 2

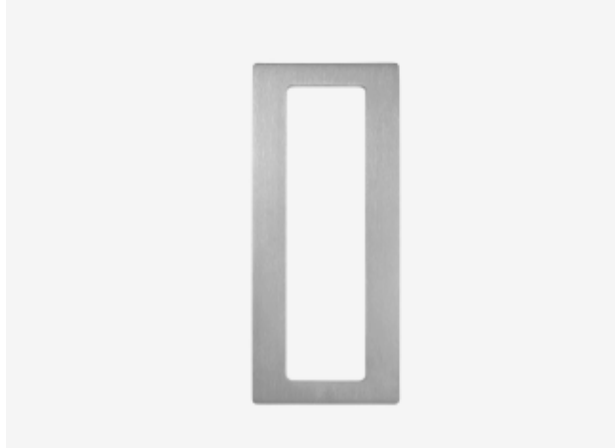

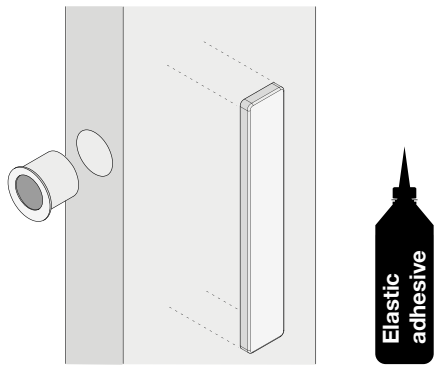

For wood doors / Para puertas de madera

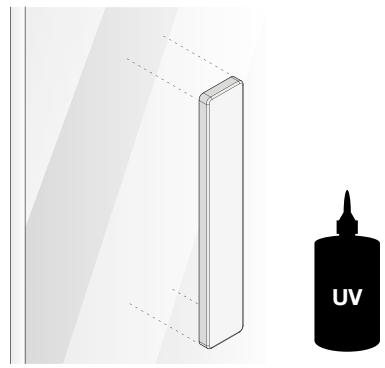

For glass doors / Para puertas de cristal

i-5250

REF.	53410	L 100 x W 48,5	DT 10
REF.	53435	L 100 x W 48,5	DT 35
REF.	53440	L 100 x W 48,5	DT 40
REF.	53445	L 100 x W 48,5	DT 45
REF.	53450	L 100 x W 48,5	DT 50

DT: Door Thickness / Grosor de puerta

Glass door handles / Tiradores para cristal

i-4252 C

REF.	53711	L 100 x W 60	DT 10

DT: Door Thickness / Grosor de puerta

i-4252

REF.	53710	L 100 x W 60	DT 10

DT: Door Thickness / Grosor de puerta

i-1310

Ø 20

REF.	51015	CC 150	H 55	Ext
REF.	51115	CC 150	H 55	Int
REF.	42115	CC 150	H 55	Set
REF.	51020	CC 200	H 55	Ext
REF.	51120	CC 200	H 55	Int
REF.	42120	CC 200	H 55	Set
REF.	51025	CC 250	H 55	Ext
REF.	51125	CC 250	H 55	Int
REF.	42125	CC 250	H 55	Set
REF.	51030	CC 300	H 55	Ext
REF.	51130	CC 300	H 55	Int
REF.	42130	CC 300	H 55	Set

Ø 30

REF.	51425	CC 250	H 90	Ext
REF.	51525	CC 250	H 90	Int
REF.	42325	CC 250	H 90	Set
REF.	51430	CC 300	H 90	Ext
REF.	51530	CC 300	H 90	Int
REF.	42330	CC 300	H 90	Set
REF.	51435	CC 350	H 90	Ext
REF.	51535	CC 350	H 90	Int
REF.	42335	CC 350	H 90	Set
REF.	51445	CC 450	H 90	Ext
REF.	51545	CC 450	H 90	Int
REF.	42345	CC 450	H 90	Set
REF.	51460	CC 600	H 90	Ext
REF.	51560	CC 600	H 90	Int
REF.	42360	CC 600	H 90	Set
REF.	51465	CC 650	H 90	Ext
REF.	51565	CC 650	H 90	Int
REF.	42365	CC 650	H 90	Set

CC: centre to centre / de centro a centro
Ext: through fixing / fijación pasante
Int: handle fixing / fijación en la manilla
Set: set of two / juego de dos

i-2000

Ø 20

REF.	54020	CC 200	L 300 x H 65	Ext
REF.	54120	CC 200	L 300 x H 65	Int
REF.	43020	CC 200	L 300 x H 65	Set
REF.	54025	CC 250	L 400 x H 65	Ext
REF.	54125	CC 250	L 400 x H 65	Int
REF.	43025	CC 250	L 400 x H 65	Set
REF.	54030	CC 300	L 450 x H 65	Ext
REF.	54130	CC 300	L 450 x H 65	Int
REF.	43030	CC 300	L 450 x H 65	Set
REF.	54050	CC 500	L 700 x H 65	Ext
REF.	54150	CC 500	L 700 x H 65	Int
REF.	43050	CC 500	L 700 x H 65	Set
REF.	54080	CC 800	L 1000 x H 65	Ext
REF.	54180	CC 800	L 1000 x H 65	Int
REF.	43080	CC 800	L 1000 x H 65	Set
REF.	54000	CC 1000	L 1200 x H 65	Ext
REF.	54100	CC 1000	L 1200 x H 65	Int
REF.	43000	CC 1000	L 1200 x H 65	Set

Ø 30

REF.	54225	CC 250	L 550 x H 90	Ext
REF.	54325	CC 250	L 550 x H 90	Int
REF.	43125	CC 250	L 550 x H 90	Set
REF.	54230	CC 300	L 600 x H 90	Ext
REF.	54330	CC 300	L 600 x H 90	Int
REF.	43130	CC 300	L 600 x H 90	Set
REF.	54235	CC 350	L 650 x H 90	Ext
REF.	54335	CC 350	L 650 x H 90	Int
REF.	43135	CC 350	L 650 x H 90	Set
REF.	54245	CC 450	L 750 x H 90	Ext
REF.	54345	CC 450	L 750 x H 90	Int
REF.	43145	CC 450	L 750 x H 90	Set
REF.	54260	CC 600	L 900 x H 90	Ext
REF.	54360	CC 600	L 900 x H 90	Int
REF.	43160	CC 600	L 900 x H 90	Set
REF.	54265	CC 650	L 950 x H 90	Ext
REF.	54365	CC 650	L 950 x H 90	Int
REF.	43165	CC 650	L 950 x H 90	Set

CC: centre to centre / de centro a centro
Ext: through fixing / fijación pasante
Int: handle fixing / fijación en la manilla
Set: set of two / juego de dos

i-2700

Ø 30

REF.	54425	CC 250	L 550 x H 78	Ext
REF.	54525	CC 250	L 550 x H 78	Int
REF.	43325	CC 250	L 550 x H 78	Set
REF.	54430	CC 300	L 600 x H 78	Ext
REF.	54530	CC 300	L 600 x H 78	Int
REF.	43330	CC 300	L 600 x H 78	Set
REF.	54435	CC 350	L 650 x H 78	Ext
REF.	54535	CC 350	L 650 x H 78	Int
REF.	43335	CC 350	L 650 x H 78	Set
REF.	54460	CC 600	L 900 x H 78	Ext
REF.	54560	CC 600	L 900 x H 78	Int
REF.	43360	CC 600	L 900 x H 78	Set
REF.	54465	CC 650	L 950 x H 78	Ext
REF.	54565	CC 650	L 950 x H 78	Int
REF.	43365	CC 650	L 950 x H 78	Set

i-2000

Straight / Recto

i-2700

Leaning / Inclinado

Pull handles / Manillones de puerta

i-3330

Ø 30

REF.	50830	CC 300	L 350 x H 90	Ext
REF.	50930	CC 300	L 350 x H 90	Int
REF.	42830	CC 300	L 350 x H 90	Set
REF.	50850	CC 500	L 550 x H 90	Ext
REF.	50950	CC 500	L 550 x H 90	Int
REF.	42850	CC 500	L 550 x H 90	Set

i-1260

REF.	53200	Ø 50 x H 48	Gir
REF.	53201	Ø 50 x H 44	Fix

i-3310

Ø 15

REF.	50015	CC 150	H 55	Ext
REF.	50115	CC 150	H 55	Int
REF.	42415	CC 150	H 55	Set
REF.	50020	CC 200	H 55	Ext
REF.	50120	CC 200	H 55	Int
REF.	42420	CC 200	H 55	Set
REF.	50030	CC 300	H 55	Ext
REF.	50130	CC 300	H 55	Int
REF.	42430	CC 300	H 55	Set

Ø 20

REF.	50220	CC 200	H 65	Ext
REF.	50320	CC 200	H 65	Int
REF.	42520	CC 200	H 65	Set
REF.	50225	CC 250	H 65	Ext
REF.	50325	CC 250	H 65	Int
REF.	42525	CC 250	H 65	Set
REF.	50230	CC 300	H 65	Ext
REF.	50330	CC 300	H 65	Int
REF.	42530	CC 300	H 65	Set

Ø 30

REF.	50425	CC 250	H 90	Ext
REF.	50525	CC 250	H 90	Int
REF.	42625	CC 250	H 90	Set
REF.	50430	CC 300	H 90	Ext
REF.	50530	CC 300	H 90	Int
REF.	42630	CC 300	H 90	Set
REF.	50435	CC 350	H 90	Ext
REF.	50535	CC 350	H 90	Int
REF.	42635	CC 350	H 90	Set
REF.	50460	CC 600	H 90	Ext
REF.	50560	CC 600	H 90	Int
REF.	42660	CC 600	H 90	Set

Pull handles / Manillones de puerta

i-4400

Ø 15

REF.	58015	CC 150	H 55	Ext
REF.	58115	CC 150	H 55	Int
REF.	44015	CC 150	H 55	Set
REF.	58020	CC 200	H 55	Ext
REF.	58120	CC 200	H 55	Int
REF.	44020	CC 200	H 55	Set
REF.	58030	CC 300	H 55	Ext
REF.	58130	CC 300	H 55	Int
REF.	44030	CC 300	H 55	Set

Ø 20

REF.	58220	CC 200	H 65	Ext
REF.	58320	CC 200	H 65	Int
REF.	44120	CC 200	H 65	Set
REF.	58225	CC 250	H 65	Ext
REF.	58325	CC 250	H 65	Int
REF.	44125	CC 250	H 65	Set
REF.	58230	CC 300	H 65	Ext
REF.	58330	CC 300	H 65	Int
REF.	44130	CC 300	H 65	Set

Ø 30

REF.	58425	CC 250	H 90	Ext
REF.	58525	CC 250	H 90	Int
REF.	44225	CC 250	H 90	Set
REF.	58430	CC 300	H 90	Ext
REF.	58530	CC 300	H 90	Int
REF.	44230	CC 300	H 90	Set
REF.	58435	CC 350	H 90	Ext
REF.	58535	CC 350	H 90	Int
REF.	44235	CC 350	H 90	Set
REF.	58460	CC 600	H 90	Ext
REF.	58560	CC 600	H 90	Int
REF.	44260	CC 600	H 90	Set

i-4000

Ø 20

REF.	57020	CC 200	L 300 x H 65	Ext
REF.	57120	CC 200	L 300 x H 65	Int
REF.	44320	CC 200	L 300 x H 65	Set
REF.	57025	CC 250	L 400 x H 65	Ext
REF.	57125	CC 250	L 400 x H 6	Int
REF.	44325	CC 250	L 400 x H 65	Set
REF.	57030	CC 300	L 450 x H 65	Ext
REF.	57130	CC 300	L 450 x H 65	Int
REF.	44330	CC 300	L 450 x H 65	Set

Ø 30

REF.	57230	CC 300	L 600 x H 90	Ext
REF.	57330	CC 300	L 600 x H 90	Int
REF.	44430	CC 300	L 600 x H 90	Set
REF.	57235	CC 350	L 650 x H 90	Ext
REF.	57335	CC 350	L 650 x H 90	Int
REF.	44435	CC 350	L 650 x H 90	Set
REF.	57250	CC 500	L 800 x H 90	Ext
REF.	57350	CC 500	L 800 x H 90	Int
REF.	44450	CC 500	L 800 x H 90	Set
REF.	57260	CC 600	L 900 x H 90	Ext
REF.	57360	CC 600	L 900 x H 90	Int
REF.	44460	CC 600	L 900 x H 90	Set

Kit 2 Ext.
Wood, glass / Madera, vidrio

- **COD. 94502** (Ø15mm M5): i-3310
- **COD. 94507** (Ø15mm M5): i-4400
- **COD. 94002** (Ø20mm M6): i-1310 / i-2000 / i-3310 / i-4000
- **COD. 94302** (Ø20mm M6): i-1000 / i-4400
- **COD. 94102** (Ø25mm M8): i-1310
- **COD. 94202** (Ø30mm M8): i-1310 / i-1630 / i-2000 / i-2630 / i-2700 / i-3310 / i-3630 / i-4000 / i-3330
- **COD. 94402** (Ø30mm M8): i-4400

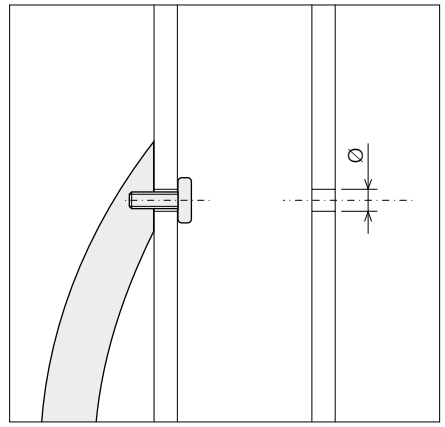

Kit 4 Set.
Wood, glass / Madera, vidrio

- **COD. 94504** (Ø15mm M5): i-3310
- **COD. 94509** (Ø15mm M5): i-4400
- **COD. 94004** (Ø20mm M6): i-1310 / i-2000 / i-3310 / i-4000
- **COD. 94304** (Ø20mm M6): i-1000 / i-4400
- **COD. 94104** (Ø25mm M8): i-1310
- **COD. 94204** (Ø30mm M8): i-1310 / i-1630 / i-2000 / i-2630/ i-2700 / i-3310 / i-3630 / i-4000
- **COD. 94402** (Ø30mm M8): i-4400

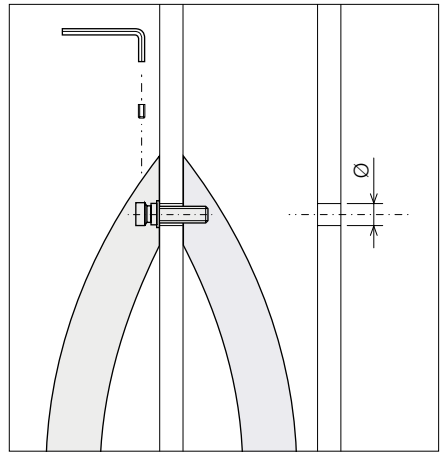

Kit 5 Int.
Concealed fixing / Fijación oculta

- **COD. 94505** (Ø15): i-3310 / i-4400
- **COD. 94005** (Ø20): i-1000, i-1310 / i-2000 / i-3310 / i-4000 / i-4400
- **COD. 94105** (Ø25): i-1310
- **COD. 94205** (Ø30): i-1310 / i-1630 / i-2000 / i-2630 / i-2700 / i-3310 / i-3330 / i-3630 / i-4000 / i-4400

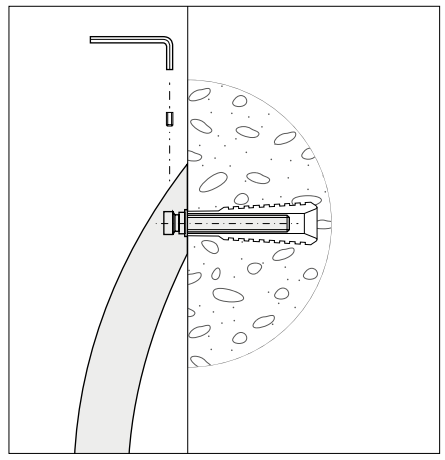

i-110

REF. 24701	CC 016	L 32 x W 6 x H 40
REF. 24715	CC 096	L 126 x W 6 x H 40
REF. 24720	CC 128	L 158 x W 6 x H 40
REF. 24725	CC 160	L 190 x W 6 x H 40
REF. 24730	CC 192	L 222 x W 6 x H 40
REF. 24750	CC 320	L 350 x W 6 x H 40
REF. 24780	CC 512	L 542 x W 6 x H 40

i-120

REF. 24601	CC 016	L 030 x W 35 x H 35
REF. 24615	CC 096	L 102 x W 30 x H 35
REF. 24620	CC 128	L 134 x W 30 x H 35
REF. 24625	CC 160	L 166 x W 30 x H 35
REF. 24630	CC 192	L 198 x W 30 x H 35
REF. 24650	CC 320	L 326 x W 30 x H 35
REF. 24680	CC 512	L 518 x W 30 x H 35

Kitchen handles / Tiradores para cocina

i-131

Ø 8

REF. 21010	CC 064	L 72 x H 30
REF. 21015	CC 096	L 104 x H 30
REF. 21020	CC 128	L 136 x H 30
REF. 21025	CC 160	L 168 x H 30
REF. 21030	CC 192	L 200 x H 30

Ø 10

REF. 21110	CC 064	L 74 x H 35
REF. 21115	CC 096	L 106 x H 35
REF. 21120	CC 128	L 138 x H 35
REF. 21125	CC 160	L 170 x H 35
REF. 21130	CC 192	L 202 x H 35
REF. 21135	CC 224	L 234 x H 35
REF. 21140	CC 256	L 266 x H 35
REF. 21145	CC 288	L 298 x H 35
REF. 21150	CC 320	L 330 x H 35
REF. 21155	CC 352	L 362 x H 35
REF. 21165	CC 416	L 426 x H 35
REF. 21180	CC 512	L 522 x H 35

i-331

Ø 12

REF. 24115	CC 096	L 108 x H 32
REF. 24120	CC 128	L 140 x H 32
REF. 24125	CC 160	L 172 x H 32
REF. 24130	CC 192	L 204 x H 32
REF. 24145	CC 288	L 300 x H 32
REF. 24150	CC 320	L 332 x H 32
REF. 24160	CC 384	L 396 x H 32
REF. 24175	CC 480	L 492 x H 32
REF. 24196	CC 736	L 748 x H 32

Ø 14

REF. 27215	CC 096	L 110 x H 32
REF. 27220	CC 128	L 142 x H 32
REF. 27230	CC 192	L 206 x H 32
REF. 27253	CC 342	L 356 x H 32
REF. 27277	CC 492	L 506 x H 32
REF. 27294	CC 592	L 606 x H 32

i-200

Ø10

REF. 10010	CC 064	L 128 x H 35
REF. 10015	CC 096	L 160 x H 35
REF. 10020	CC 128	L 192 x H 35
REF. 10025	CC 160	L 224 x H 35
REF. 10030	CC 192	L 256 x H 35
REF. 10035	CC 224	L 288 x H 35
REF. 10040	CC 256	L 320 x H 35
REF. 10045	CC 288	L 352 x H 35
REF. 10050	CC 320	L 384 x H 35
REF. 10055	CC 352	L 416 x H 35
REF. 10060	CC 384	L 448 x H 35
REF. 10065	CC 416	L 480 x H 35
REF. 10070	CC 448	L 512 x H 35
REF. 10075	CC 480	L 544 x H 35
REF. 10080	CC 512	L 576 x H 35
REF. 10085	CC 544	L 608 x H 35
REF. 10090	CC 576	L 640 x H 35
REF. 10095	CC 608	L 672 x H 35
REF. 10100	CC 640	L 704 x H 35

REF. 10105	CC 672	L 736 x H 35
REF. 10110	CC 704	L 768 x H 35
REF. 10115	CC 736	L 800 x H 35
REF. 10120	CC 768	L 832 x H 35
REF. 10125	CC 832	L 896 x H 35
REF. 10130	CC 896	L 960 x H 35
REF. 10135	CC 960	L 1024 x H 35
REF. 10140	CC 1184	L 1248 x H 35
REF. 10160	CC 1376	L 1440 x H 35

Ø12

REF. 12010	CC 064	L 128 x H 37
REF. 12015	CC 096	L 160 x H 37
REF. 12020	CC 128	L 192 x H 37
REF. 12025	CC 160	L 224 x H 37
REF. 12030	CC 192	L 256 x H 37
REF. 12035	CC 224	L 288 x H 37
REF. 12040	CC 256	L 320 x H 37
REF. 12045	CC 288	L 352 x H 37
REF. 12050	CC 320	L 384 x H 37
REF. 12055	CC 352	L 416 x H 37
REF. 12060	CC 384	L 448 x H 37
REF. 12065	CC 416	L 480 x H 37
REF. 12070	CC 448	L 512 x H 37
REF. 12075	CC 480	L 544 x H 37
REF. 12080	CC 512	L 576 x H 37
REF. 12085	CC 544	L 608 x H 37
REF. 12090	CC 576	L 640 x H 37
REF. 12095	CC 608	L 672 x H 37
REF. 12100	CC 640	L 704 x H 37
REF. 12105	CC 672	L 736 x H 37
REF. 12110	CC 704	L 768 x H 37

REF. 12115	CC 736	L 800 x H 37
REF. 12120	CC 768	L 832 x H 37
REF. 12125	CC 832	L 896 x H 37
REF. 12130	CC 896	L 960 x H 37
REF. 12135	CC 960	L 1024 x H 37
REF. 12139	CC 1152	L 1216 x H 37
REF. 12140	CC 1184	L 1248 x H 37
REF. 12145	CC 1280	L 1344 x H 37
REF. 12160	CC 1376	L 1440 x H 37
REF. 12167	CC 1408	L 1472 x H 37
REF. 12172	CC 1440	L 1504 x H 37

Kitchen handles / Tiradores para cocina

i-330

Ø 12

REF.	24325	CC 160	L 224 x H 34
REF.	24330	CC 192	L 256 x H 34
REF.	24345	CC 288	L 352 x H 34

i-333

Ø 12

REF.	24420	CC 128	L 151 x H 34
REF.	24425	CC 160	L 183 x H 34
REF.	24430	CC 192	L 215 x H 34
REF.	24446	CC 292	L 315 x H 34
REF.	24450	CC 320	L 343 x H 34
REF.	24453	CC 342	L 365 x H 34
REF.	24461	CC 392	L 415 x H 34
REF.	24477	CC 492	L 515 x H 34
REF.	24493	CC 592	L 615 x H 34
REF.	24497	CC 592	L 815 x H 34

i-440

Ø 12

REF.	26215	CC 096	L 108 x H 40
REF.	26220	CC 128	L 140 x H 40
REF.	26225	CC 160	L 172 x H 40
REF.	26230	CC 192	L 204 x H 40
REF.	26235	CC 224	L 236 x H 40
REF.	26250	CC 320	L 332 x H 40
REF.	26280	CC 512	L 524 x H 40
REF.	26296	CC 612	L 624 x H 40
REF.	26323	CC 812	L 824 x H 40

i-400

Ø 12

REF.	12415	CC 096	L 160 x H 40
REF.	12420	CC 128	L 192 x H 40
REF.	12425	CC 160	L 224 x H 40
REF.	12430	CC 192	L 256 x H 40
REF.	12435	CC 224	L 288 x H 40
REF.	12440	CC 256	L 320 x H 40
REF.	12445	CC 288	L 352 x H 40
REF.	12450	CC 320	L 384 x H 40
REF.	12460	CC 384	L 448 x H 40
REF.	12475	CC 480	L 544 x H 40
REF.	12480	CC 512	L 576 x H 40
REF.	12500	CC 640	L 704 x H 40

in-350

REF. 35005	L 032 x W 20,5 x H 40
REF. 35015	L 096 x W 20,5 x H 40
REF. 35020	L 128 x W 20,5 x H 40
REF. 35025	L 160 x W 20,5 x H 40
REF. 35030	L 192 x W 20,5 x H 40
REF. 35035	L 224 x W 20,5 x H 40
REF. 35040	L 256 x W 20,5 x H 40
REF. 35055	L 352 x W 20,5 x H 40
REF. 35085	L 544 x W 20,5 x H 40

in-360

REF. 36005	L 032 x W 20,5 x H 40
REF. 36015	L 096 x W 20,5 x H 40
REF. 36020	L 128 x W 20,5 x H 40
REF. 36025	L 160 x W 20,5 x H 40
REF. 36030	L 192 x W 20,5 x H 40
REF. 36035	L 224 x W 20,5 x H 40

in-370

REF. 37005	L 032 x W 20,5 x H 40
REF. 37015	L 096 x W 20,5 x H 40
REF. 37020	L 128 x W 20,5 x H 40
REF. 37025	L 160 x W 20,5 x H 40
REF. 37030	L 192 x W 20,5 x H 40
REF. 37035	L 224 x W 20,5 x H 40

in-380

REF. 38005	L 032 x W 48 x H 40

i-126

REF. 30110	Ø 10 x H 24
REF. 30115	Ø 15 x H 26
REF. 30120	Ø 20 x H 28
REF. 30125	Ø 25 x H 30
REF. 30130	Ø 30 x H 33
REF. 30140	Ø 40 x H 48
REF. 30150	Ø 50 x H 44

ed-126

REF. 30215	Ø 15 x H 22
REF. 30218	Ø 18 x H 24
REF. 30221	Ø 20 x H 26

i-129

REF. 31020	Ø 20 x H 17
REF. 31025	Ø 25 x H 21
REF. 31030	Ø 30 x H 25
REF. 31035	Ø 35 x H 27

Furniture knobs / Pomos para muebles

i-158

REF. 31310	Ø 10 x H 15
REF. 31315	Ø 15 x H 20
REF. 31320	Ø 20 x H 24,5
REF. 31325	Ø 25 x H 30
REF. 31330	Ø 30 x H 32,5
REF. 31335	Ø 35 x H 40

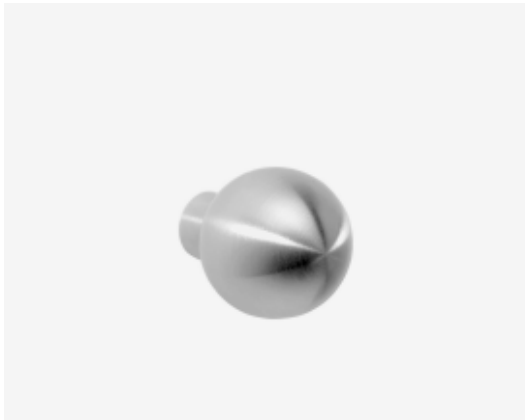

i-203

REF. 32017	Ø 17 x H 23

i-209

REF. 32312	Ø 12 x H 20
REF. 32316	Ø 16 x H 26
REF. 32320	Ø 20 x H 28
REF. 32325	Ø 24 x H 29
REF. 32330	Ø 29 x H 35

i-326

REF. 32610	Ø 10 x H 24
REF. 32615	Ø 15 x H 29,5
REF. 32620	Ø 20 x H 33
REF. 32625	Ø 25 x H 35,5

i-327

REF. 32710	Ø 10 x H 24
REF. 32715	Ø 15 x H 25,5
REF. 32720	Ø 20 x H 33,5
REF. 32725	Ø 25 x H 35

i-337

REF. 33715	Ø 15 x H 32,5
REF. 33720	Ø 20 x H 37,5
REF. 33725	Ø 25 x H 41,5

Wardrobe knobs / Pomos para armario

i-410

REF. 34010	Ø 10 x H 22
REF. 34015	Ø 15 x H 25
REF. 34020	Ø 20 x H 28
REF. 34025	Ø 25 x H 30

i-426

REF. 34110	Ø 10 x H 24
REF. 34115	Ø 15 x H 30
REF. 34120	Ø 20 x H 33
REF. 34125	Ø 25 x H 36

i-437

REF. 34000	Ø 25 x H 25

Percha 1

REF.	92001	Ø 35 x Ø14 x H 42

Percha 129

REF.	92010	Ø 30 x H 40

Hangers / Colgadores

Percha 4

REF.	92006	Ø 35 x Ø 14 H 42

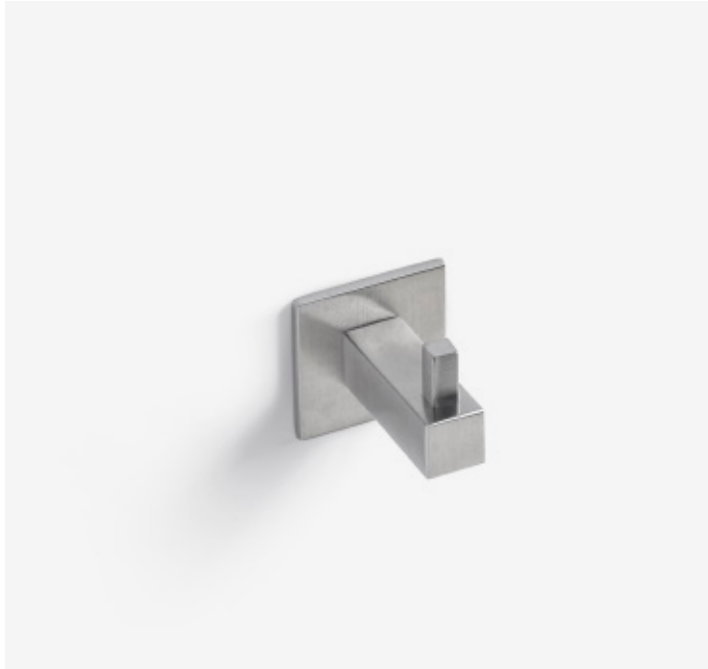

Percha 5

REF.	92004	Ø 20 x H 48
REF.	92005	Ø 25 x H 95

Ku-20

REF. 41000	CC 300	H 75
REF. 41001	CC 400	H 75
REF. 41002	CC 500	H 75

Ku-02

REF. 40020	CC 500	H 100
REF. 40021	CC 980	H 100

Ku-01

REF. 40010	L 150 x H 42

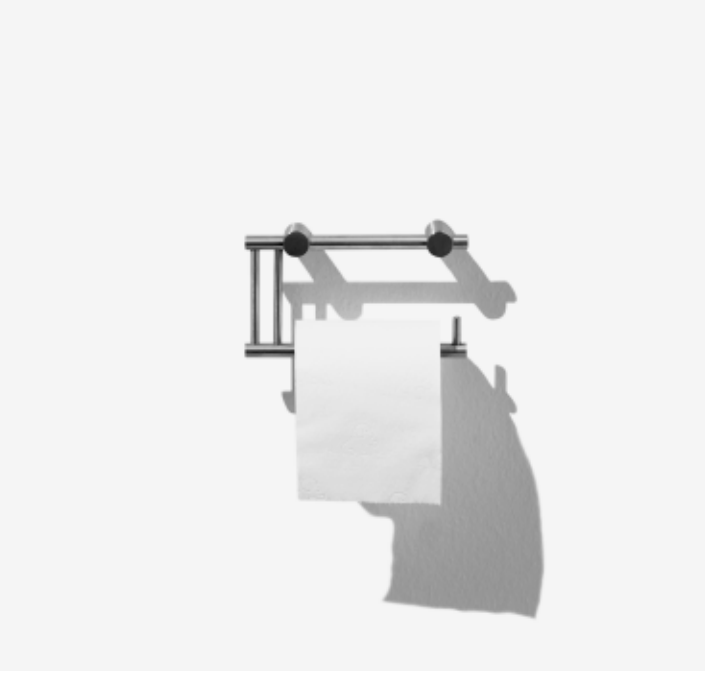

Ku-03

REF. 40030	Ø 20 x L 116

Ku-07

REF. 40070	Ø 35 x H 469

Ku-09

REF. 40090	Ø 88 x L 405

Ku-05

REF. 40051	L 130 x H 100
REF. 40052	L 170 x H 100
REF. 40053	L 320 x H 100

REF. 40054	L 640 x H 100

Ku-05 90º

REF. 40055	L 236 x W 236

Tope 2

REF.	91020	Ø 20 x H 35
REF.	91035	Ø 35 x H 50

Tope 4

REF.	91220	Ø 20 x H 35
REF.	91235	Ø 35 x H 50

Door stoppers / Topes para puerta

Tope 3

REF.	91100	Ø 25 x H 65
REF.	91101	Ø 25 x H 95
REF.	91102	Ø 25 x H 125

0	REF.	95000	L 060 x W 060
0	REF.	95100	L 150 x W 150
1	REF.	95001	L 060 x W 060
1	REF.	95101	L 150 x W 150
2	REF.	95002	L 060 x W 060
2	REF.	95102	L 150 x W 150
3	REF.	95003	L 060 x W 060
3	REF.	95103	L 150 x W 150
4	REF.	95004	L 060 x W 060
4	REF.	95104	L 150 x W 150
5	REF.	95005	L 060 x W 060
5	REF.	95105	L 150 x W 150
6	REF.	95006	L 060 x W 060
6	REF.	95106	L 150 x W 150
7	REF.	95007	L 060 x W 060
7	REF.	95107	L 150 x W 150
8	REF.	95008	L 060 x W 060
8	REF.	95108	L 150 x W 150
9	REF.	95009	L 060 x W 060
9	REF.	95109	L 150 x W 150
a	REF.	95010	L 060 x W 060
a	REF.	95110	L 150 x W 150
b	REF.	95011	L 060 x W 060
b	REF.	95111	L 150 x W 150
c	REF.	95012	L 060 x W 060
c	REF.	95112	L 150 x W 150
d	REF.	95013	L 060 x W 060
d	REF.	95113	L 150 x W 150
/	REF.	95038	L 060 x W 060
/	REF.	95138	L 150 x W 150

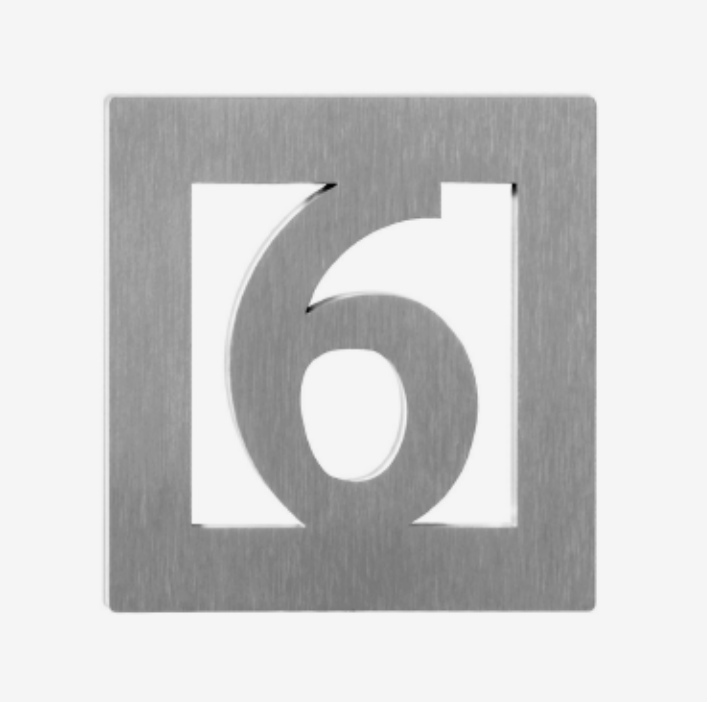

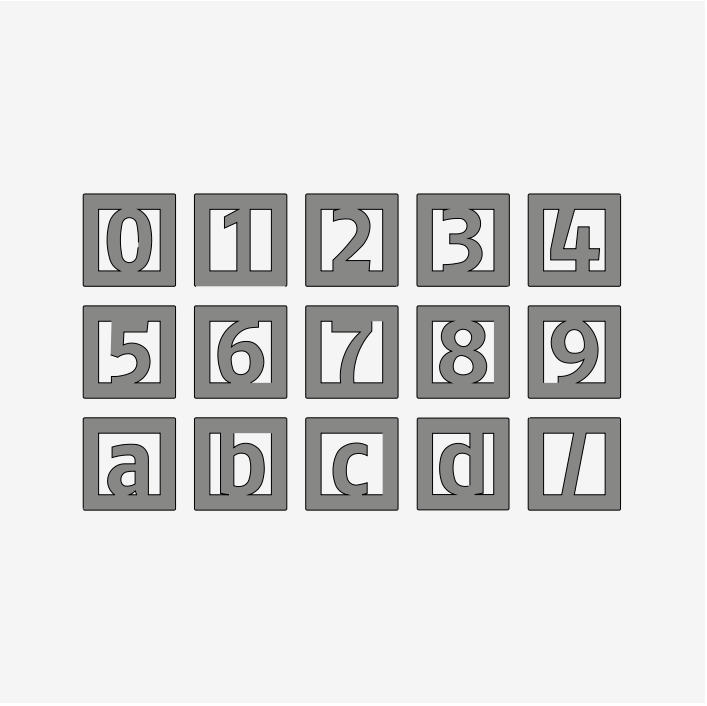

Signage / Señalética

	REF.	95200	L 100 x W 100
	REF.	95201	L 100 x W 100
	REF.	95202	L 100 x W 100
	REF.	95203	L 100 x W 100
	REF.	95204	L 100 x W 100
	REF.	95205	L 100 x W 100
	REF.	95206	L 100 x W 100
	REF.	95207	L 100 x W 100
	REF.	95208	L 100 x W 100
	REF.	95209	L 100 x W 100
	REF.	95210	L 100 x W 100
	REF.	95211	L 100 x W 100
	REF.	95212	L 100 x W 100
	REF.	95213	L 100 x W 100
	REF.	95214	L 100 x W 100
	REF.	95215	L 100 x W 100

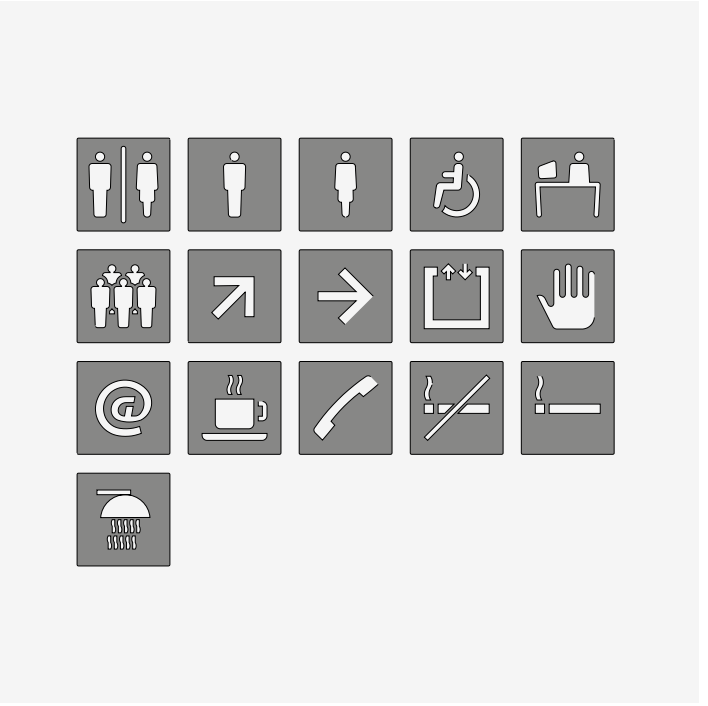

Didheya

Ezurriki Kalea 20
20305 Irun, Gipuzkoa
Spain

T. +34 943 610 052

info@didheya.es
www.didheya.com

Didheya Industrial
www.didheya.net